IP Addressing

Chamindu Kasun Karunarathna
B.Sc (Hons) Information Technology

IP Addresses

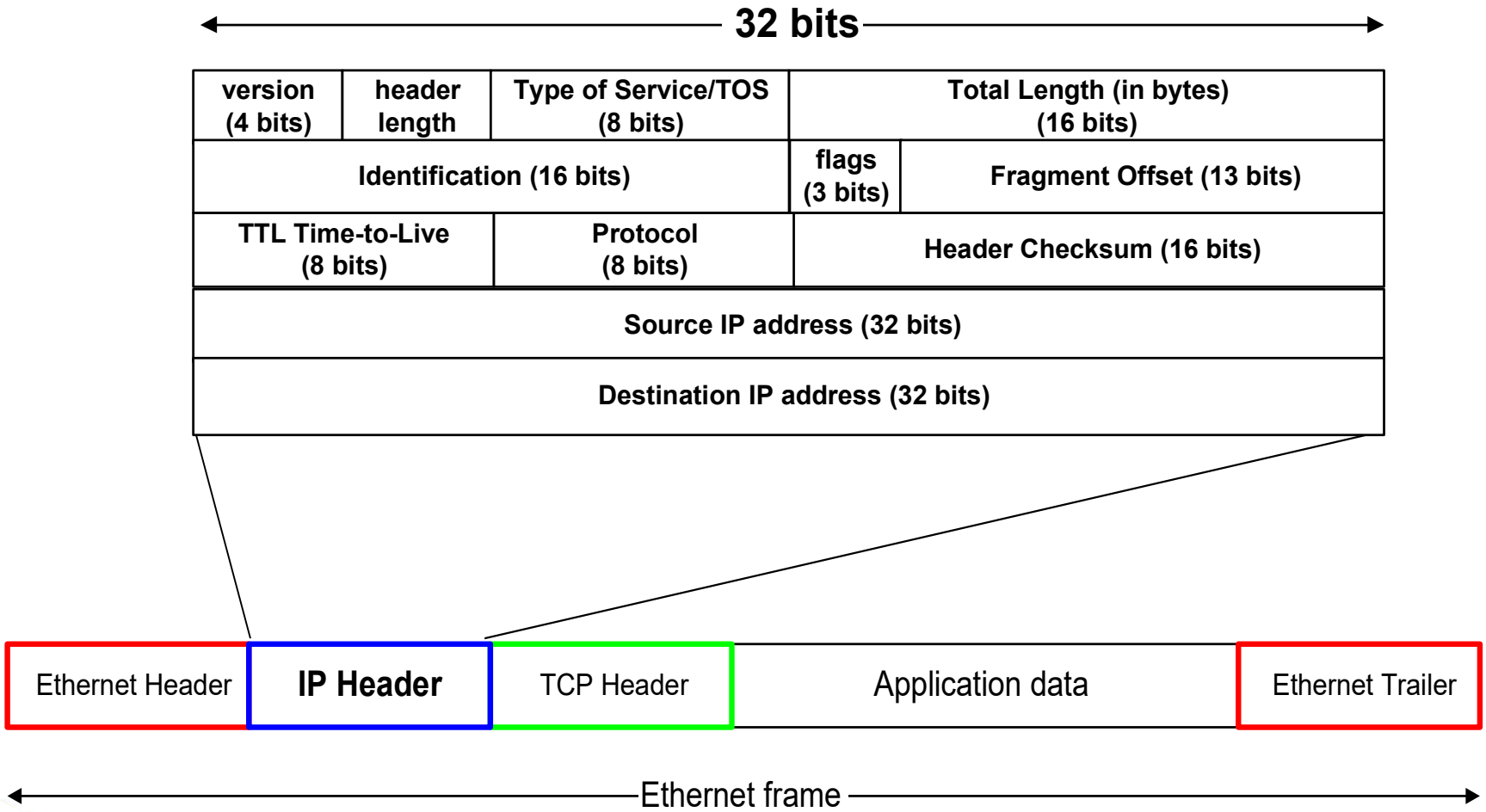

IP Addresses

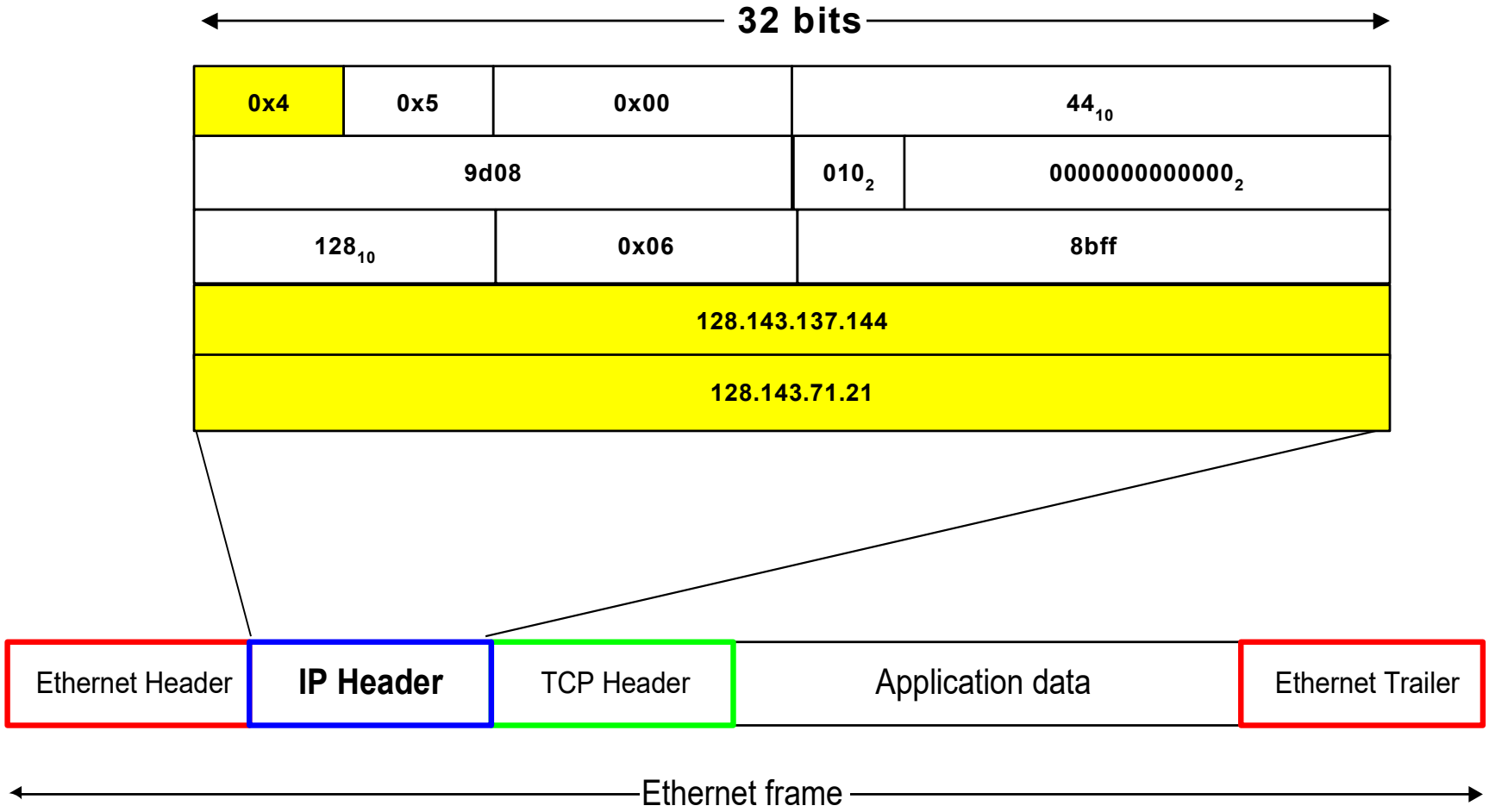

What is an IP Address?

- An IP address is a unique global address for a network interface
- Exceptions:
  - Dynamically assigned IP addresses
  - IP addresses in private networks
- An IP address:

  - is a **32 bit long** identifier
  - encodes a network number (**network prefix**) and a **host number**
- Max possible IP Addresses: 2^{32} = 4.09 Billion

Population by continent [edit]

Continent	Density (inhabitants/km^2)	Population (2013 estimates)	Most populous country	Most populous city
Asia	96.4	4,298,723,000	China (1,361,000,000)[20]	Tokyo (35,676,000)
Africa	36.7	1,110,635,000	Nigeria (173,120,000)	Cairo (19,439,541)
Europe	72.9	742,452,000	Russia (143,600,000; approx. 110 million in Europe)	Moscow (14,837,510)
North America[21]	22.9	565,265,000	United States (317,000,000)	Mexico City/Metro Area (8,851,080 / 21,163,226)
South America	22.8	406,740,000	Brazil (201,032,714)	São Paulo City/Metro Area (11,316,149 / 27,640,577)
Oceania	4.5	38,304,000	Australia (23,258,000)	Sydney (4,575,532)
Antarctica	0.0003 (varies)	4,490 (non-permanent, varies)[22]	N/A[note 1]	McMurdo Station (1,200) (non-permanent, varies)

World population (millions)[17]				
#	Top ten most populous countries	1990	2008	2025*
1	China	1,141	1,333	1,458
2	India	849	1,140	1,398
3	United States	250	304	352
4	Indonesia	178	228	273
5	Brazil	150	192	223
6	Pakistan	108	166	226
7	Bangladesh	116	160	198
8	Nigeria	94	151	208
9	Russia	148	142	137
10	Japan	124	128	126
	World total	5,265	6,688	8,004
	Top ten most populous (%)	60.0%	58.9%	57.5%

Network prefix and host number

- The network prefix identifies a network and the host number identifies a specific host (actually, interface on the network).

- How do we know how long the network prefix is?
  - **Before 1993:** The network prefix is implicitly defined (see **class-based addressing**)

    or
  - **After 1993:** The network prefix is indicated by a **netmask.**

Dotted Decimal Notation

- IP addresses are written in a so-called **dotted decimal notation**
- Each byte is identified by a decimal number in the range [0..255]:
- **Example:**

10000000	10001111	10001001	10010000
1st Byte	2nd Byte	3rd Byte	4th Byte
= 128	**= 143**	**= 137**	**= 144**

128.143.137.144

Example

- Example: **ucsc.cmb.ac.lk**

- Network address is: **128.143.0.0** **(or 128.143)**
- Host number is: **137.144**
- Netmask is: **255.255.0.0** (or **ffff0000)**

- Prefix or CIDR notation: **128.143.137.144/16**
  - Network prefix is 16 bits long

Special IP Addresses

- Reserved or (by convention) special addresses:

  Loopback interfaces
  - all addresses **127.0.0.1-127.255.255.255** are reserved for loopback interfaces
  - Most systems use 127.0.0.1 as loopback address
  - loopback interface is associated with name "localhost"

  IP address of a network
  - Host number is set to all zeros, e.g., 128.143.**0.0** /16

  Broadcast address
  - Host number is all ones, e.g., 128.143.**255.255** /16
  - Broadcast goes to all hosts on the network
  - Often ignored due to security concerns

- Test / Experimental addresses (Private IPs)

  Certain address ranges are reserved for "experimental use". Packets should get dropped if they contain this destination address (see RFC 1918):

  10.0.0.0 - 10.255.255.255
  172.16.0.0 - 172.31.255.255
  192.168.0.0 - 192.168.255.255

- Convention (but not a reserved address)

  Default gateway has host number set to 'first' or 'last' number: 192.0.1.**1** or 192.0.1.**254**

Subnetting

- Problem: Organizations have multiple networks which are independently managed
  - Solution 1: Allocate a **separate network address** for each network
    - Difficult to manage
    - From the outside of the organization, each network must be addressable.
  - Solution 2: Add another **level of hierarchy** to the IP addressing structure

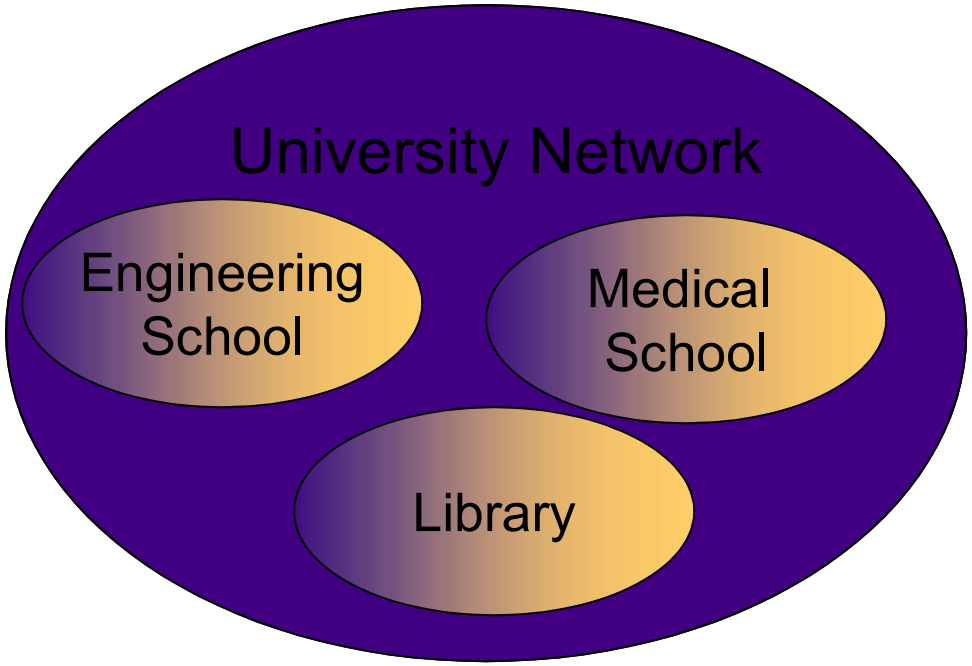

→ **Subnetting**

Address assignment with subnetting

- Each part of the organization is allocated a range of IP addresses (subnets or subnetworks)
- Addresses in each subnet can be administered locally

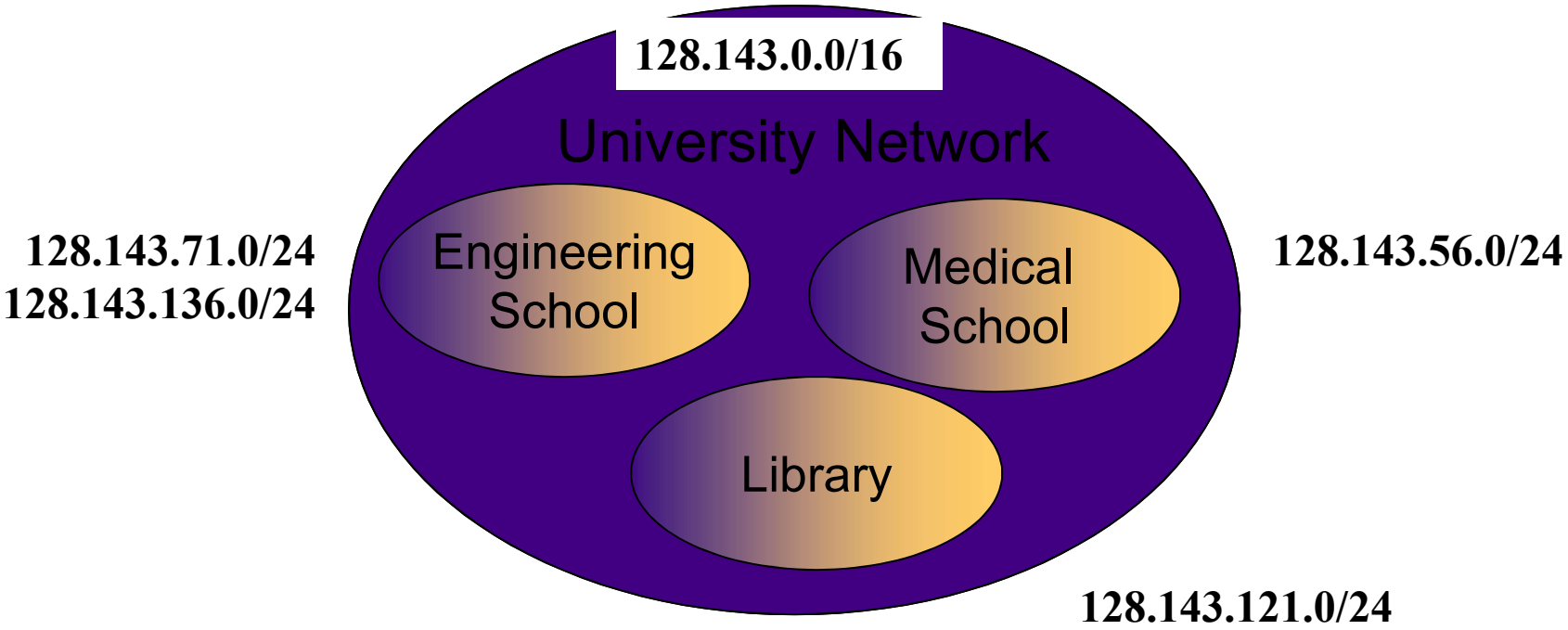

Basic Idea of Subnetting

- Split the host number portion of an IP address into **a subnet number** and a (smaller) **host number**.
- Result is a **3-layer** hierarchy

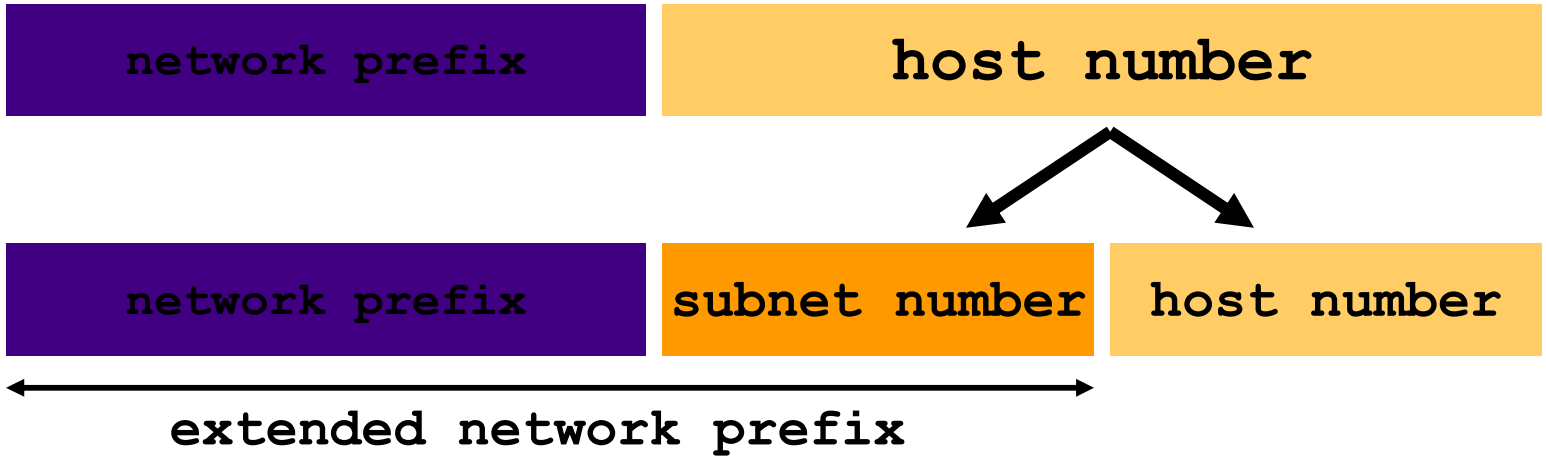

- Then:
  - Subnets can be freely assigned within the organization
  - Internally, subnets are treated as separate networks
  - Subnet structure is not visible outside the organization

Classful IP Addresses (Until 1993)

- When Internet addresses were standardized (early 1980s), the Internet address space was divided up into classes:
  - **Class A:** Network prefix is 8 bits long
  - **Class B:** Network prefix is 16 bits long
  - **Class C:** Network prefix is 24 bits long

- Each IP address contained a key which identifies the class:
  - **Class A:** IP address starts with “0”
  - **Class B:** IP address starts with “10”
  - **Class C:** IP address starts with “110”

Problems with Classful IP Addresses

- By the early 1990s, the original classful address scheme had a **number of problems**
- **Flat** address space. Routing tables on the backbone Internet need to have an entry for each network address. When Class C networks were widely used, this created a problem. By the 1993, the size of the routing tables started to **outgrow** the capacity of routers.
- Other problems:
  - Too few network addresses for large networks
  - Class A and Class B addresses were gone
  - Limited flexibility for network addresses:
  - Class A and B addresses are overkill (>64,000 addresses)
  - Class C address is insufficient (requires 40 Class C addresses)

CIDR - Classless Interdomain Routing

- IP backbone routers have one routing table entry for each network address:
- With subnetting, a backbone router only needs to know one entry for each Class A, B, or C networks
- This is acceptable for Class A and Class B networks
- But this is not acceptable for Class C networks
- In 1993, the size of the routing tables started to outgrow the capacity of routers
- Consequence: The Class-based assignment of IP addresses had to be abandoned

CIDR - Classless Interdomain Routing

- **Goals**:
  - New interpretation of the IP address space
  - Restructure IP address assignments to increase efficiency
  - Permits route aggregation to minimize route table entries

- **CIDR** (Classless Interdomain routing)
  - abandons the notion of classes
  - Key Concept: The length of the network prefix in the IP addresses is kept arbitrary
  - Consequence: Size of the network prefix must be provided with an IP address

CIDR Notation

- CIDR notation of an IP address:

  192.0.2.0/18

  - "18" is the prefix length. It states that the first 18 bits are the network prefix of the address (and 14 bits are available for specific host addresses)
- CIDR notation can replace the use of sub-netmasks (but is more general)
  - IP address 128.143.137.144 and sub-netmask **255.255.255.0** becomes 128.143.137.144/**24**
- CIDR notation allows to **drop trailing zeros** of network addresses:

  192.0.2.0/18 can be written as 192.0.2/18
- CIDR **eliminates** the concept of class A, B, and C networks and replaces it with a network prefix

Variable Length SM (VLSM)

- VLSM is the process by which we take a major network address and use **different subnet masks** at different points.

- A fixed length mask has the advantage of **simplicity**. It will be easy for the network staff/users to remember the SM. However, if we have to keep the subnet mask the same we encounter severe problems **concerning addressing space**.

- Some useful tips on VLSM:
  - Use as few different masks as possible
  - Keep lookup table to figure out the masks for a given subnet
  - Make sure not to overlap subnets with VLSM

- When do we need to use **different** subnet masks?

Variable Length SM (VLSM)

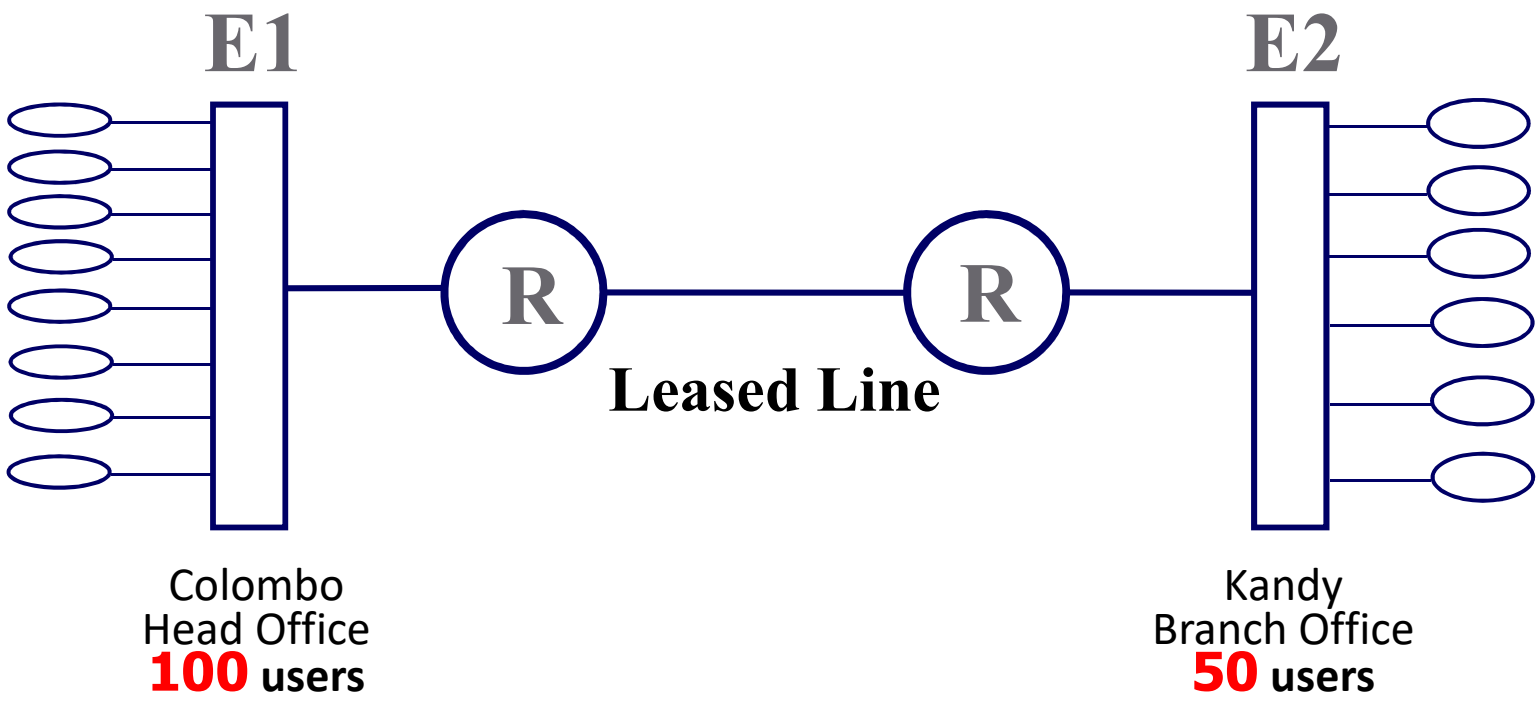

Variable Length SM (VLSM)

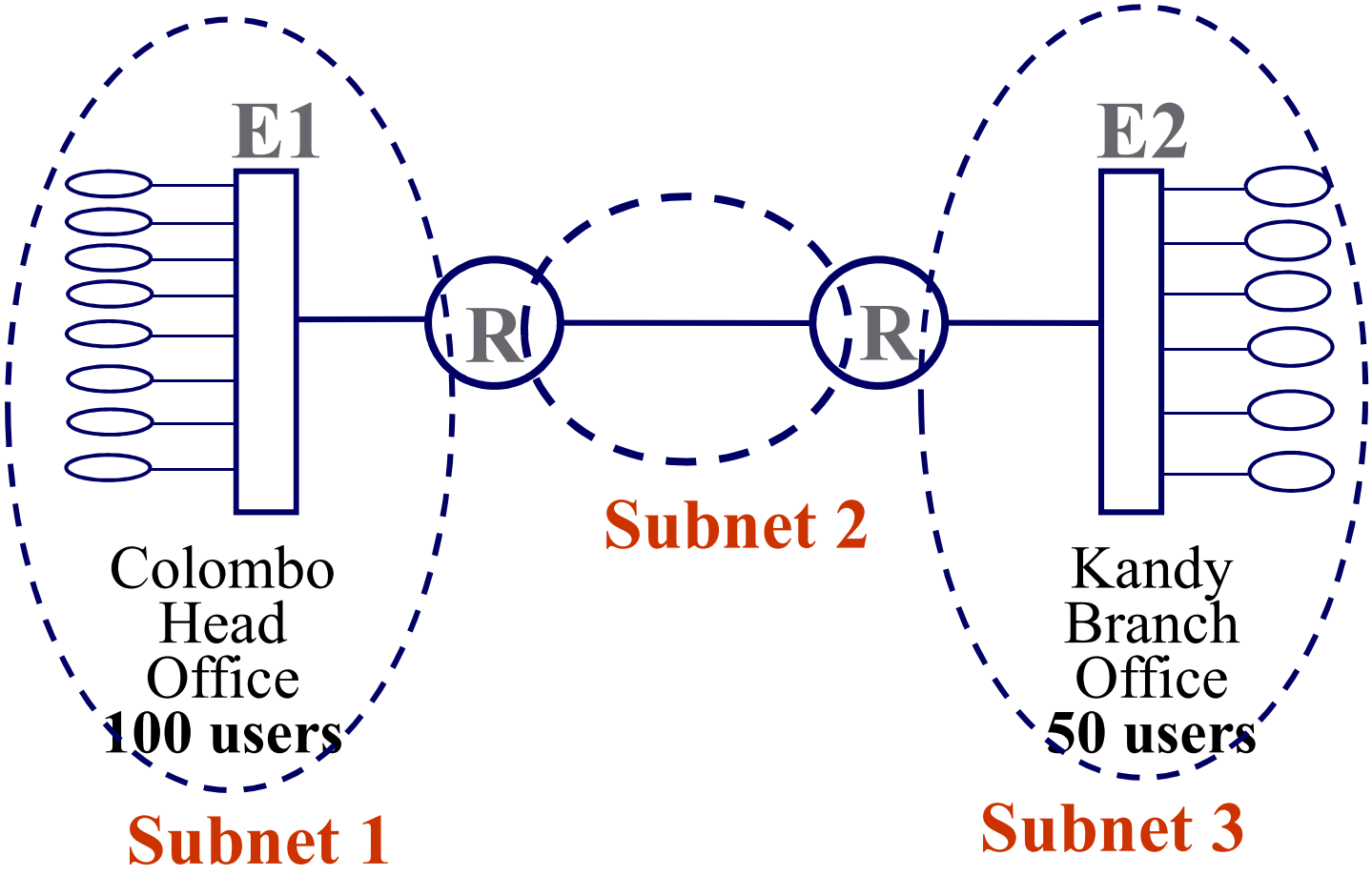

Variable Length SM (VLSM)

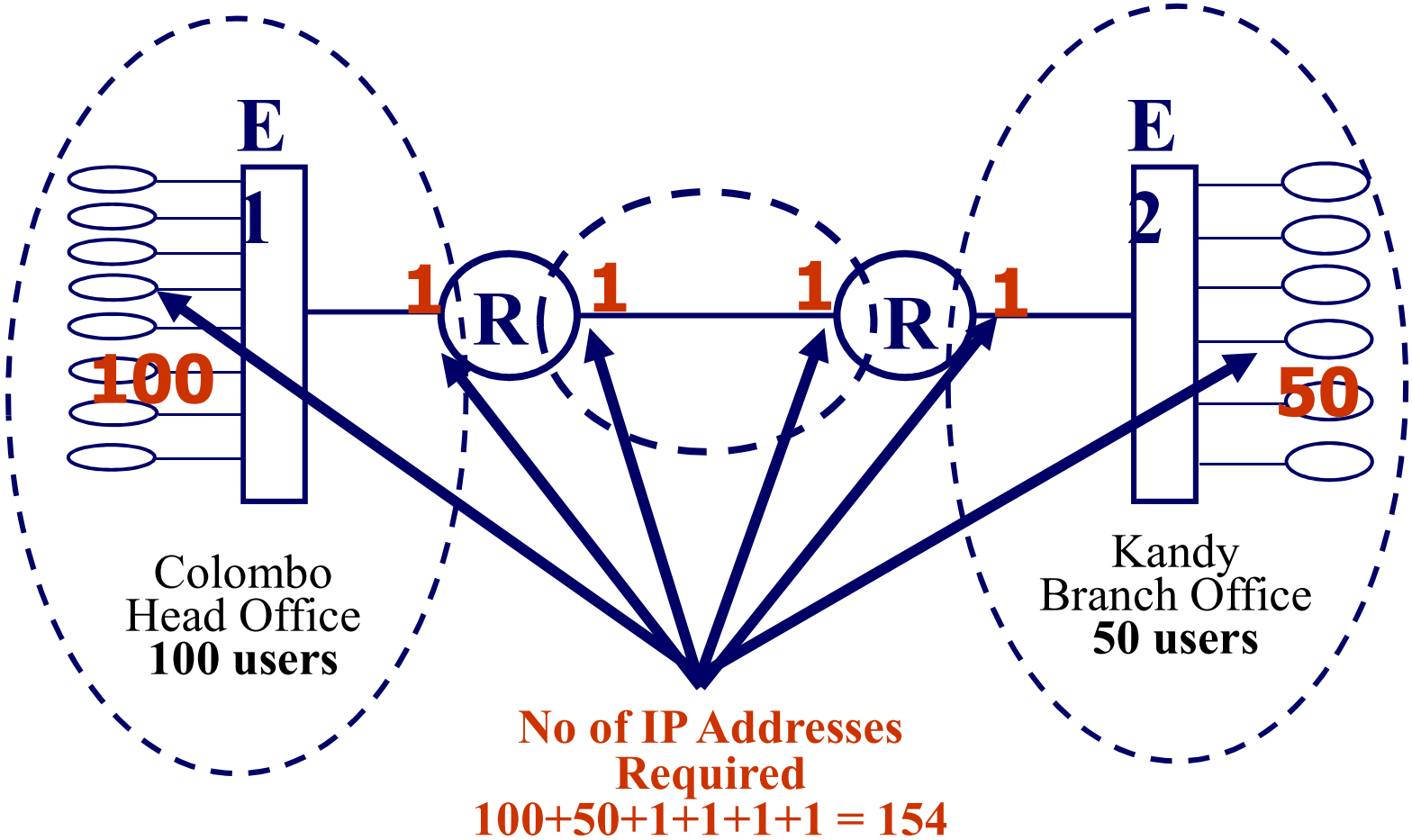

Variable Length SM (VLSM)

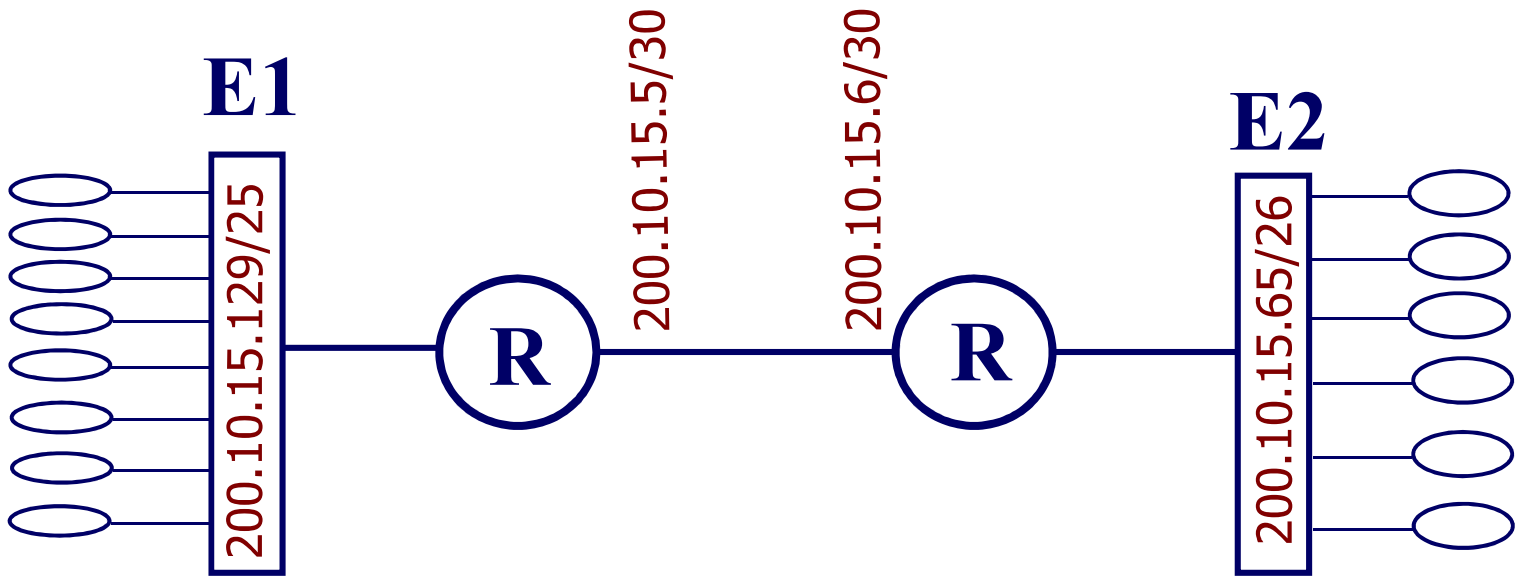

Colombo
Head Office
100 users

200.10.15.130 –
200.10.15.230/25

Kandy
Branch Office
50 users

200.10.15.66 –
200.10.15.110 /26

Route Summarization (Aggregation)

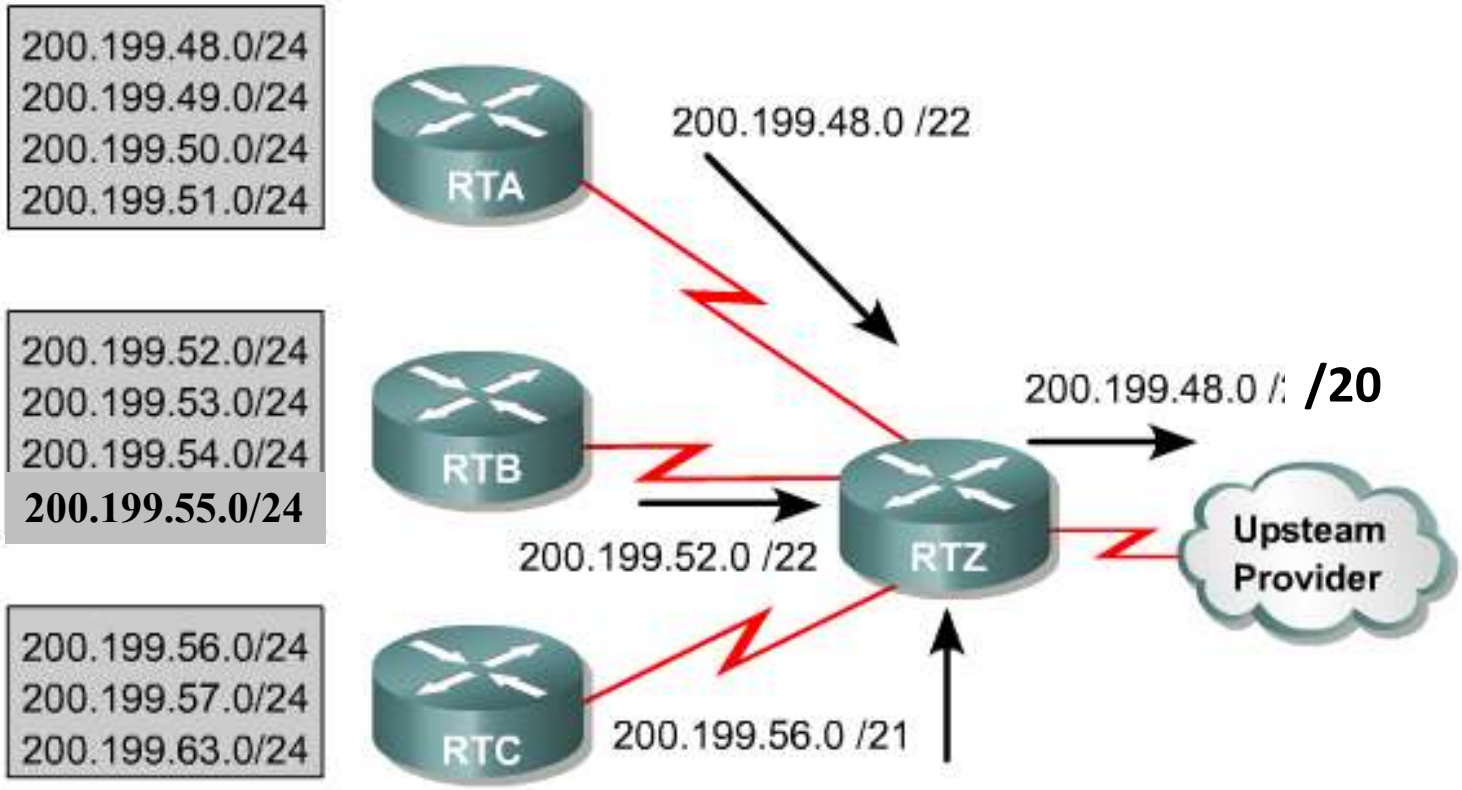

Route summarization reduces routing table size by aggregating routes to multiple networks into one supernet.

IP Aggregation

Example: What is the **aggregated IP block** that corresponds to the IP addresses
18.100.212.0/24,
18.100.213.0/24,
18.100.214.0/24 and
18.100.215.0/24?

	Common Bit		
18.100.212.0/24	18.100 . 110101	00	00000000
18.100.213.0/24	18.100 . 110101	01	00000000
18.100.214.0/24	18.100 . 110101	10	00000000
18.100.215.0/24	18.100 . 110101	11	00000000

Answer:

Any Questions?